TuffStuff Self-Priming Diaphragm Pumps

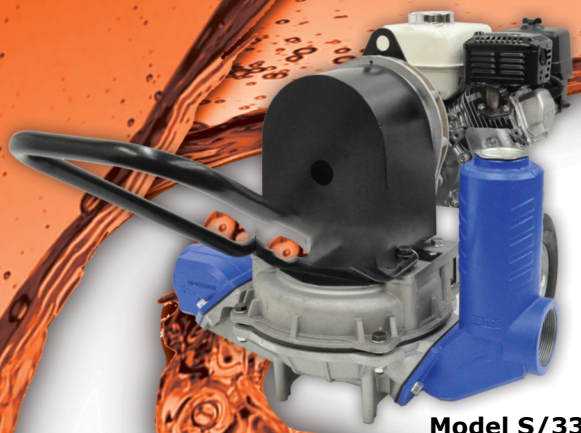

Model S/335G-96/X

Model S/336G-96/X

Model S/335Z-96*/X
*Shown with 90° Rotatable Base

- ***Sand Cast Aluminum Construction for Portability and Durability***
- ***Thermoplastic Santoprene Diaphragm***
- ***2˝ or 3˝ NPT Suction and Discharge Ports***
- ***Self-Priming to 25 Ft. Lift***
- ***Maximum Solids Handling up to 1-5/8˝***
- ***Modular Component Design Permits Easy Maintenance and Cleanout***
- ***Driver Options: Gasoline, Diesel or Electric Single & Three Phase Motors***
- ***Delivers up to 90 GPM***
- ***90° Rotatable Base on All Models***

Diaphragm pumps features a 2-stage, heavy duty forged gear driven transmission. Often referred to as Mud or Sludge Pumps, diaphragm pumps are designed to pump mud, slurry, sewage and thick liquids that have the ability to flow. Diaphragm pumps are available with a choice of drivers to meet your application requirements: gasoline, diesel or single or three phase electric motor. Built-in check valve assures self-priming to 20 feet after initial prime. Heavy duty forged gear driven transmission is designed to operate pump at 40 strokes per minute for electric motor models and 60 strokes per minute for engine driven models. Each unit includes a 2" or 3" NPT steel suction strainer, two NPT nipples and a wheel kit for portability. Models S/336E-K6/X, S/336G-K6/X, S/335G-K6/X and S/335E-K6/X are kits provided less motor or engine. **Suction and discharge port sizes cannot be reduced.**

Performance of Diaphragm Pumps

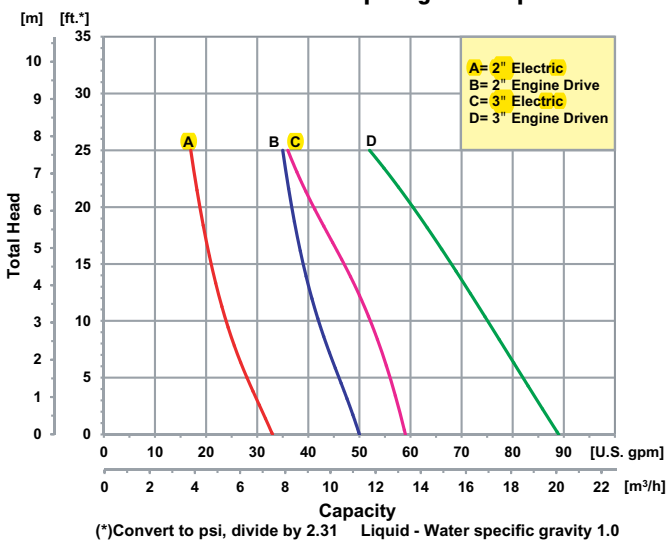

(*)Convert to psi, divide by 2.31 Liquid - Water specific gravity 1.0

For use with nonflammable liquids compatible with pump component materials. Viton® and Teflon® are registered trademarks of E. I. Dupont.

Self-Priming Diaphragm Pumps

2" Self-Priming Diaphragm Pumps

Model	Curve	Driver	Run Time (Hours)	Tank Size (Gal/Ltr.)	Ship Wt. (Lbs.)
S/336G-96/X	B	Honda GX120▲	2.0	0.52/2.0	160
S/336G-K6/X	B	Kit, Less Engine	2.0	N/A	95
S/336E-96/X❖	A	1.5 HP Electric Motor❖	N/A	N/A	165
S/336E-K6/X	A	Kit, Less Motor	N/A	N/A	95

Maximum Solids Handling Capacity: 1-1/4" Diameter

Model	SUC*	DIS*	L**	W**	H**
S/336G-96/X	2"	2"	43.3 [110.1]	20.1 [51.0]	23.2 [59.0]
S/336G-K6/X	2"	2"	N/A	20.1 [51.0]	23.2 [59.0]
S/336E-96/X❖	2"	2"	44.1 [112.0]	20.1 [51.0]	23.2 [59.0]
S/336E-K6/X	2"	2"	N/A	20.1 [51.0]	23.2 [59.0]

336E/335E-96 Motors: 115/208-230 VAC, 1 Phase, 15.8 Amp, 60 Hz; 110/220 VAC 50 Hz, 17 Amps

3" Self-Priming Diaphragm Pumps

Model	Curve	Driver	Run Time (Hours)	Tank Size (Gal/Ltr.)	Ship Wt. (Lbs.)
S/335G-96/X	D	Honda GX120▲	2.0	0.52/2.0	175
S/335A-96/X	D	Briggs & Stratton	1.5	0.52/2.0	175
S/335H-96/X	D	Honda GX160▲	2.5	0.82/3.1	185
S/335Z-96/X	D	Hatz Diesel 1B20	2.7	0.79/3.0	205
S/335G-K6/X	D	Kit, Less Engine	N/A	N/A	145
S/335E-96/X❖	C	1.5 HP Electric Motor❖	N/A	N/A	185
S/335E-K6/X	C	Kit, Less Motor	N/A	N/A	145

Construction: Sand Cast Aluminum
▲ Oil Alert Included
❖ Special Order 3 Phase Version Available

Maximum Solids Handling Capacity: 1-5/8" Diameter

Model	SUC*	DIS*	L**	W	H**
S/335G-96/X	3"	3"	43.4 [110.1]	26.4 [67.0]	23.4 [59.4]
S/335A-9/X6	3"	3"	41.7 [105.9]	26.4 [67.0]	24.1 [61.1]
S/335H-96/X	3"	3"	43.9 [111.6]	26.4 [67.0]	24.1 [61.1]
S/335Z-96/X	3"	3"	42.4 [107.6]	26.4 [67.0]	25.2 [64.1]
335G-K6	3"	3"	N/A	26.4 [67.0]	23.4 [59.4]
S/336E-96/X❖	3"	3"	44.1 [112.0]	26.4 [67.0]	23.4 [59.4]
S/335E-K6/X	3"	3"	N/A	26.4 [67.0]	23.4 [59.4]

(*) Standard NPT (Female) pipe thread.
(**) This dimension may vary due to engine manufacturer's specifications.
NOTE: Dimensions are in inches (centimeters) and have a tolerance of ± 1/8".

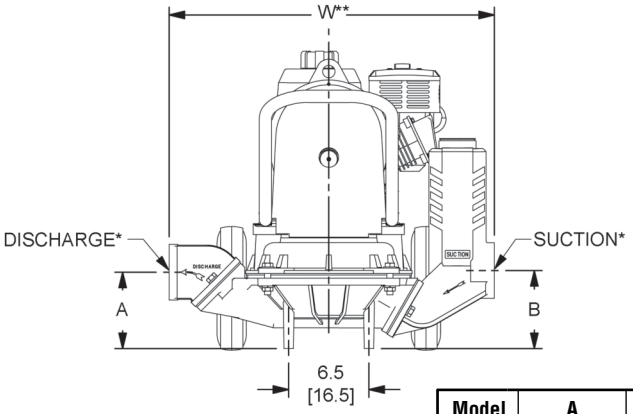

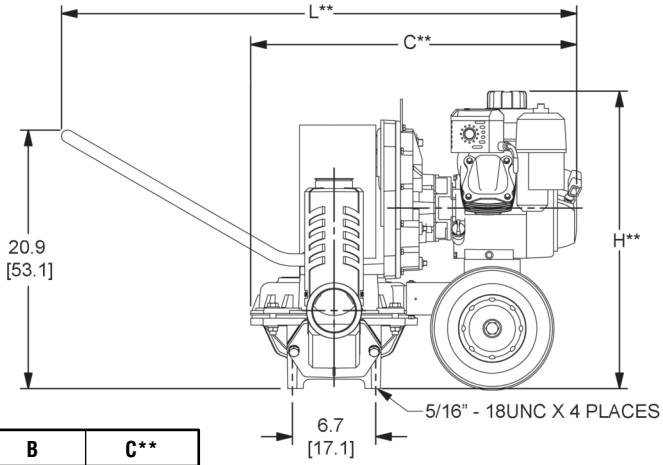

Model	A	B	C**
S/336X	6.2 [15.7]	6.3 [16.0]	28.6 [72.7]
S/335X	6.2 [15.7]	6.3 [16.0]	28.6 [72.7]

Standard Features

- Driver Options: Gasoline, Diesel or Electric Single & Three Phase Motors
- 2" to 3" NPT Port Sizes
- Maximum Temperature 180° F
- Models S/336E-96/X and S/335E-96/X—1.5 HP Single Phase, 115/230 VAC Volt Motor with Manual Reset Overload
- Models S/336G-K6/X and S/335G-K6/X—Kit Furnished Less Engine. For use with Gasoline or Diesel Engines with 0.75" Keyed Shaft (SAE J609a Mounting Flange)
- Models S/336E-K6/X and S/335E-K6/X—Kit Furnished Less Motor. For use with Electric Motor (1725 RPM) or Air Motor with a Minimum of 1.5 HP (56C Mounting Flange Required)